Material and some slide content from:
- Emerson Murphy-Hill
- Software Architecture: Foundations, Theory, and Practice
- Essential Software Architecture

Architectural Styles

Reid Holmes

Lunar lander example

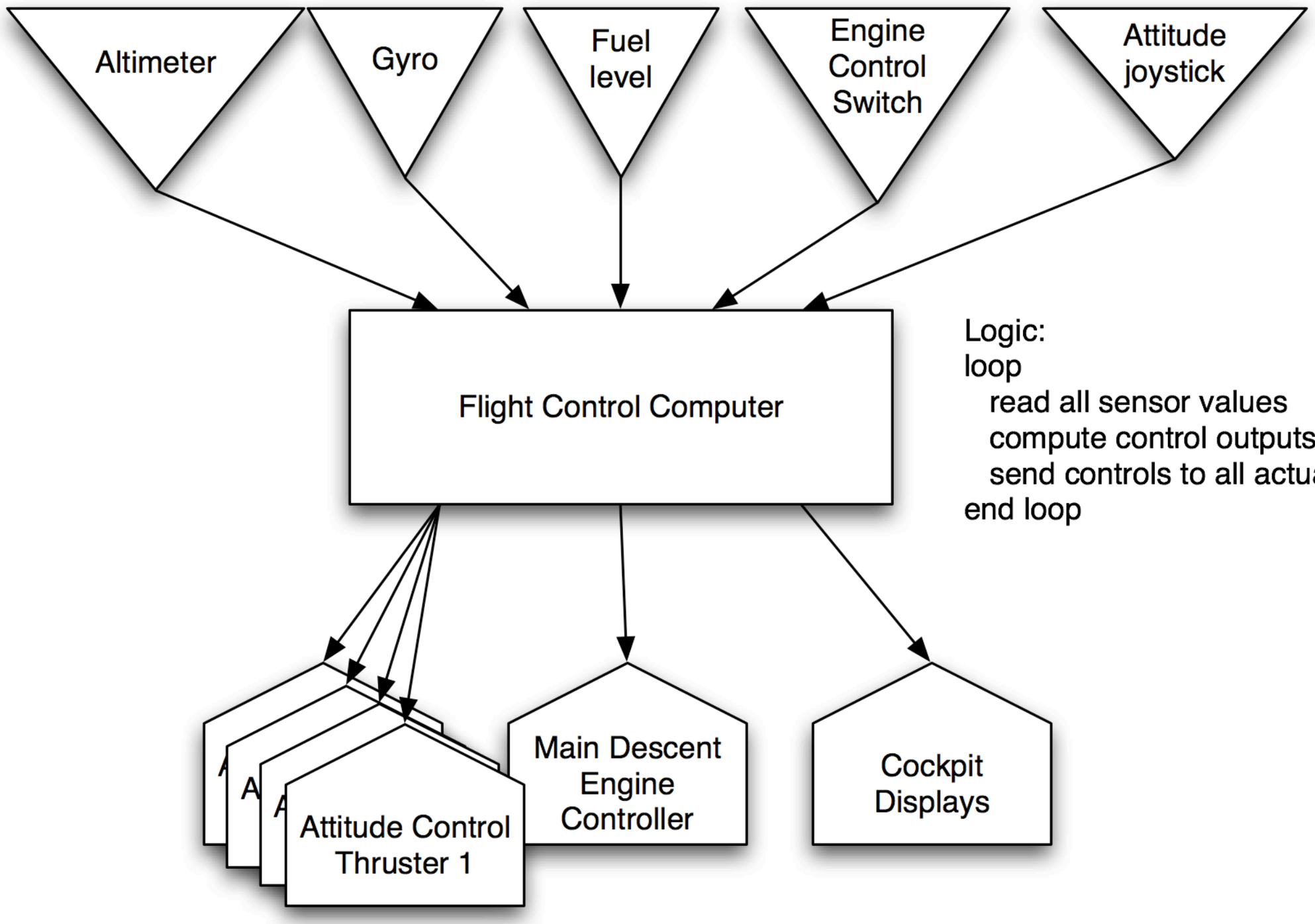

Logic:
loop
  read all sensor values
  compute control outputs
  send controls to all actuators
end loop

Language-based

- Influenced by the languages that implement them
- Lower-level, very flexible
- Often combined with other styles for scalability

WE WON'T COVER THESE IN ANY GREAT DETAIL

Examples:

Main & subroutine

Object-oriented

Style: Main program & subroutine

- Decomposition of functional elements.
- Components:
  - Main program and subroutines.
- Connections:
  - Function / procedure calls.
- Data elements:
  - Values passed in / out of subroutines.
- Topology:
  - Directed graph between subroutines and main program.

[TAILOR ET AL.]

Style: Main program & subroutine

- Additional constraints:
  - None.
- Qualities:
  - Modularity, as long as interfaces are maintained.
- Typical uses:
  - Small programs.
- Cautions:
  - Poor scalability. Data structures are ill-defined.
- Relations to languages and environments:
  - BASIC, Pascal, or C.

Style: Object-oriented

- Encapsulation of state and actions.
- Components:
  - Objects or ADTs.
- Connections:
  - Method calls.
- Data elements:
  - Method arguments.
- Topology:
  - Varies. Data shared through calls and inheritance.

[TAILOR ET AL.]

Style: Object-oriented

- Additional constraints:
  - Commonly used with shared memory (pointers). Object preserves identity of representation.
- Qualities:
  - Data integrity. Abstraction. Change implementations without affecting clients. Can break problems into interacting parts.
- Typical uses:
  - With complex, dynamic data. Correlation to real-world entities.
- Cautions:
  - Distributed applications hard. Often inefficient for sci. computing. Potential for high coupling via constructors. Understanding can be difficult.
- Relations to languages and environments:
  - C++, Java.

Dataflow

[CZARNECKI]

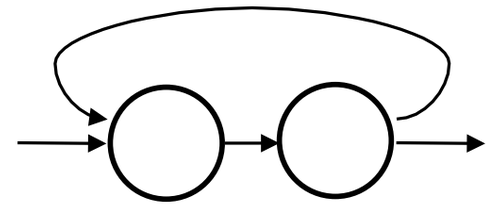

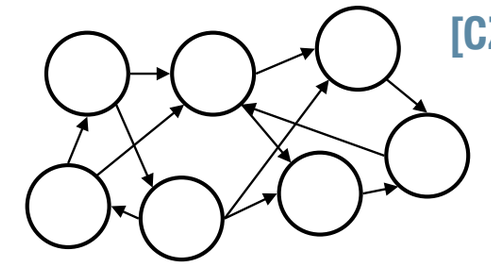

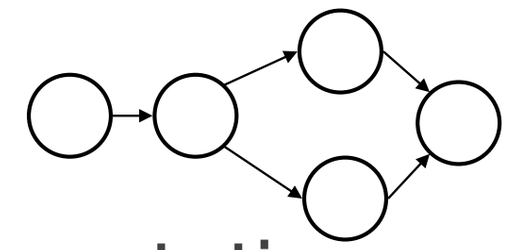

- A data flow system is one in which:
  - The availability of data controls computation
  - The structure of the design is determined by the orderly motion of data between components
- The pattern of data flow is explicit
- Variations:
  - Push vs. pull
  - Degree of concurrency
  - Topology

Examples:

Batch-sequential

Pipe-and-filter

Style: Batch-sequential

- Separate programs executed in order passed, each step proceeding after the the previous finishes.
- Components:
  - Independent programs.
- Connections:
  - Sneaker-net.
- Data elements:
  - Explicit output of complete program from preceding step.
- Topology:
  - Linear.

Style: Batch-sequential

- Additional constraints:
  - One program runs at a time (to completion).
- Qualities:
  - Interruptible execution.
- Typical uses:
  - Transaction processing in financial systems.
- Cautions:
  - Programs cannot easily feed back in to one another.

Style: Pipe-and-filter

[TAILOR ET AL.]

Style: Pipe-and-filter

- Streams of data are passed concurrently from one program to another.
- Components:
  - Independent programs (called filters).
- Connections:
  - Explicitly routed by OS.
- Data elements:
  - Linear data streams, often text.
- Topology:
  - Typically pipeline.

Style: Pipe-and-filter

- Qualities:
  - Filters are independent and can be composed in novel sequences.
- Typical uses:
  - Very common in OS utilities.
- Cautions:
  - Not optimal for interactive programs or for complex data structures.

Layered

- Layered systems are hierarchically organized providing services to upper layers and acting as clients for lower layers
- Lower levels provide more general functionality to more specific upper layers
- In strict layered systems, layers can only communicate with adjacent layers

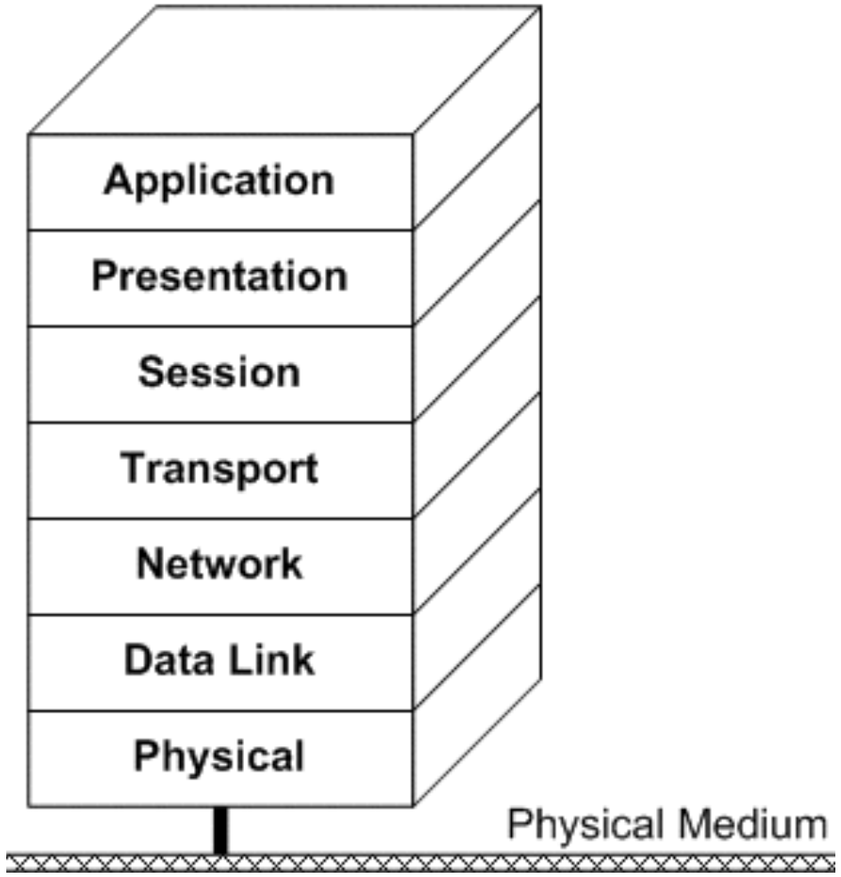

Examples:

Virtual machine

Client-server

[TAILOR ET AL.]

Style: Client-server

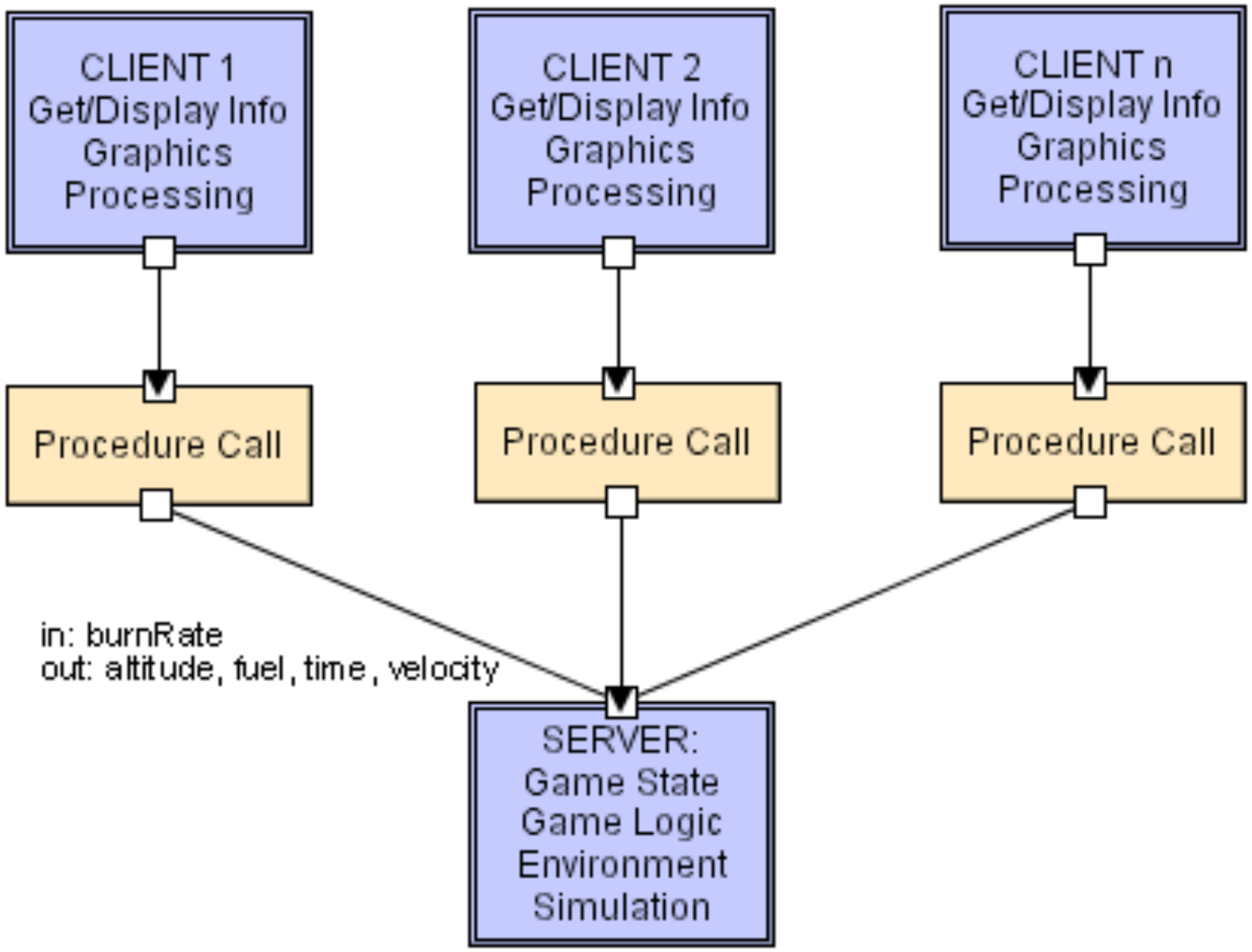

[TAILOR ET AL.]

Style: Client-server

- Clients communicate with server which performs actions and returns data. Client initiates communication.
- Components:
  - Clients and server.
- Connections:
  - Protocols, RPC.
- Data elements:
  - Parameters and return values sent / received by connectors.
- Topology:
  - Two level. Typically many clients.

Style: Client-server

- Additional constraints:
  - Clients cannot communicate with each other.
- Qualities:
  - Centralization of computation. Server can handle many clients.
- Typical uses:
  - Applications where: client is simple; data integrity important; computation expensive.
- Cautions:
  - Bandwidth and lag concerns.

Interpreter

- Commands interpreted dynamically
- Programs parse commands and act accordingly, often on some central data store

Examples:

Interpreter

Mobile code

Style: Mobile code

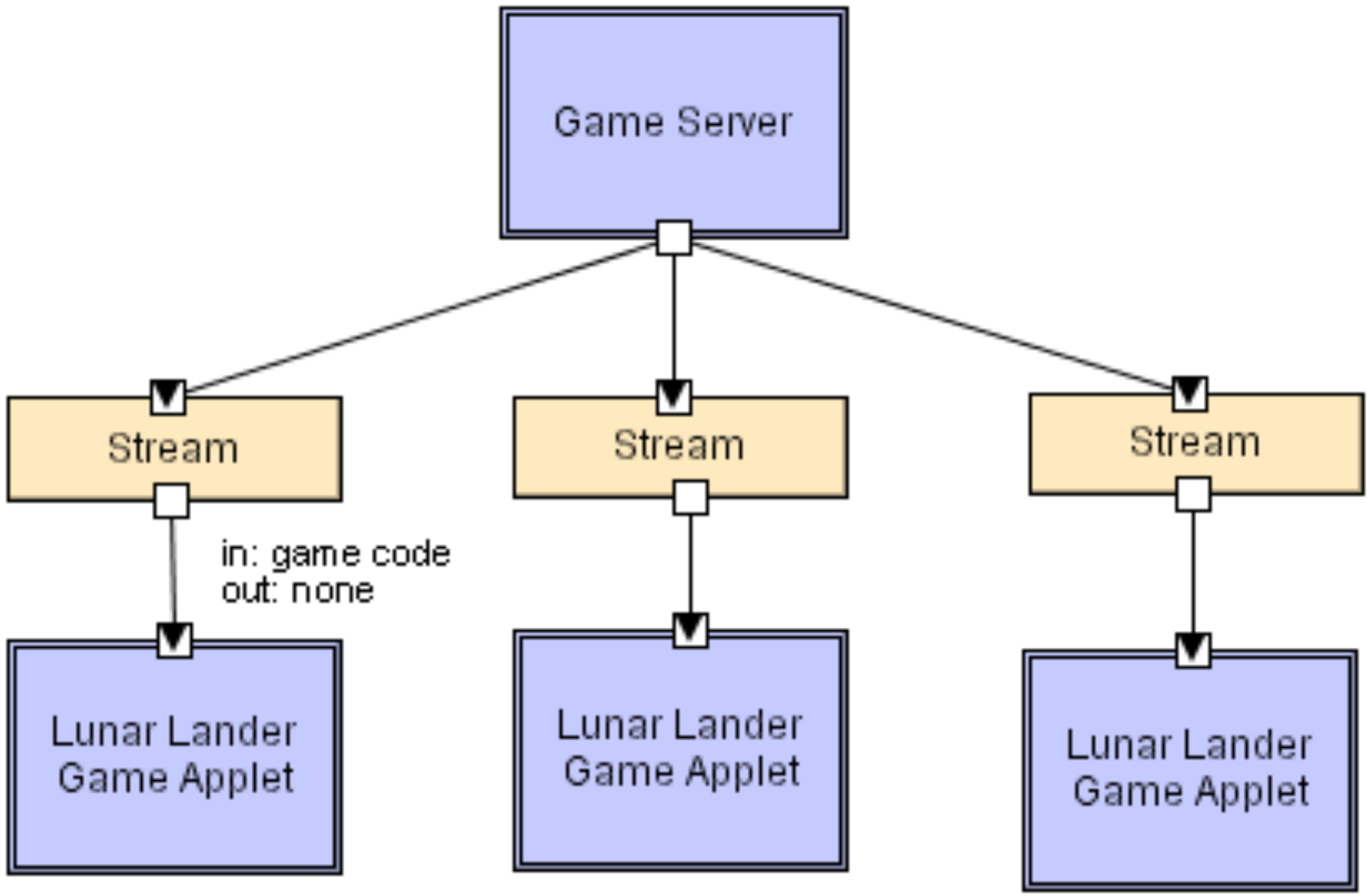

Style: Mobile code

- Code and state move to different hosts to be interpreted.
- Components:
  - Execution dock, compilers / interpreter.
- Connections:
  - Network protocols.
- Data elements:
  - Representations of code, program state, data.
- Topology:
  - Network.

[TAILOR ET AL.]

Style: Mobile code

- Variants:
  - Code-on-demand, remote evaluation, and mobile agent.
- Qualities:
  - Dynamic adaptability.
- Typical uses:
  - For moving code to computing locations that are closer to the large data sets being operated on.
- Cautions:
  - Security. Transmission costs. Network reliability.

Style: Interpreter

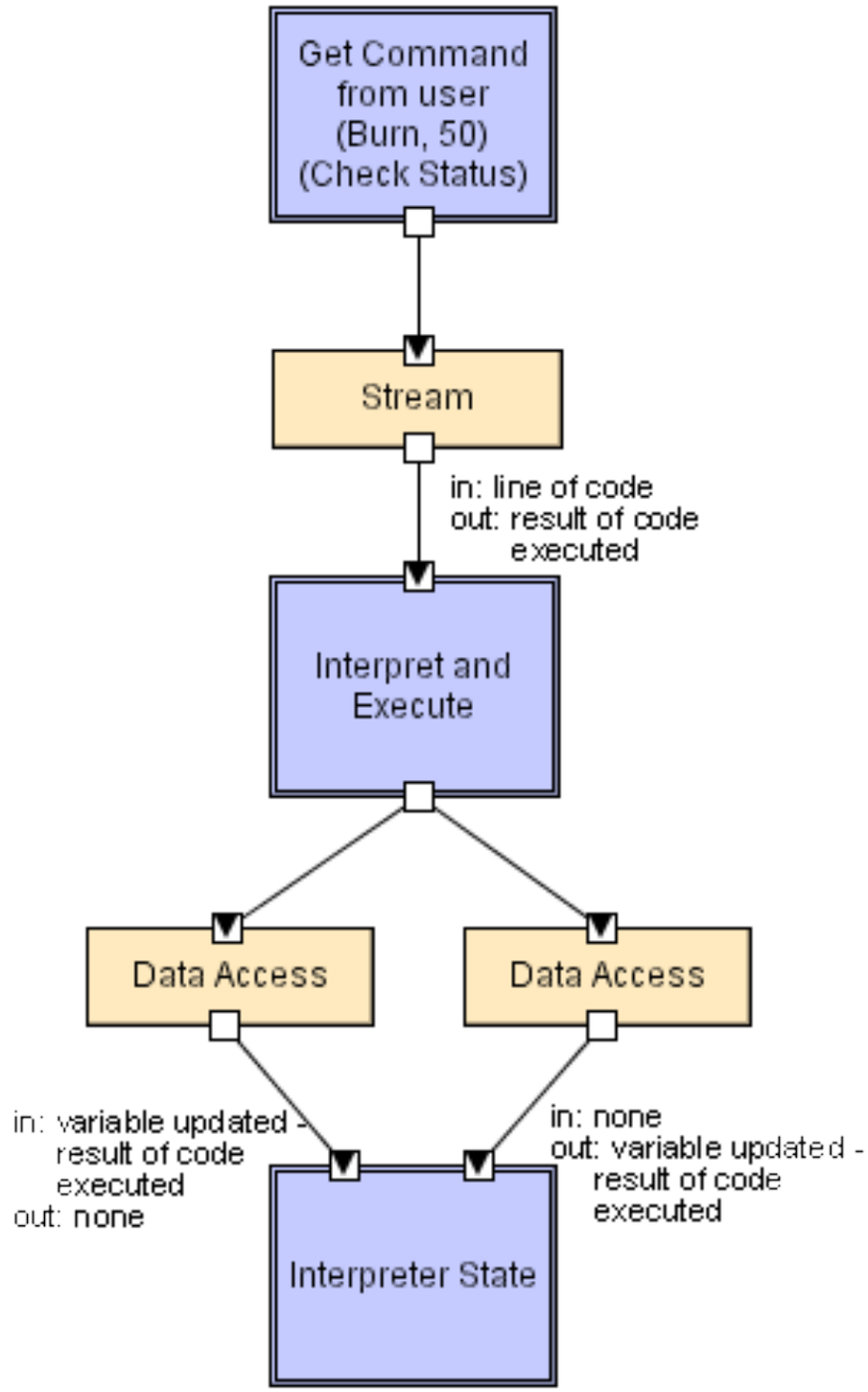

Style: Interpreter

- Interpret commands on the fly.
- Based on a virtual machine produced in SW.
- Components are the ‘program’, its data, its state, and the interpretation engine.
- e.g., Java Virtual Machine. JVM interprets Java bytecode).

[TAILOR ET AL.]

Style: Interpreter

- Update state by parsing and executing commands.
- Components:
  - Command interpreter, program state, UI.
- Connections:
  - Components tightly bound; uses procedure calls and shared state.
- Data elements:
  - Commands.
- Topology:
  - Tightly coupled three-tier.

Style: Interpreter

- Qualities:
  - Highly dynamic behaviour. New capabilities can be added without changing architecture by introducing new commands.
- Typical uses:
  - End-user programming.
- Cautions:
  - May not be performant.

Shared state

- Characterized by:
  - Central store that represents system state
  - Components that communicate through shared data store
- Central store is explicitly designed and structured

Examples:

Blackboard

Rule-based

Style: Blackboard

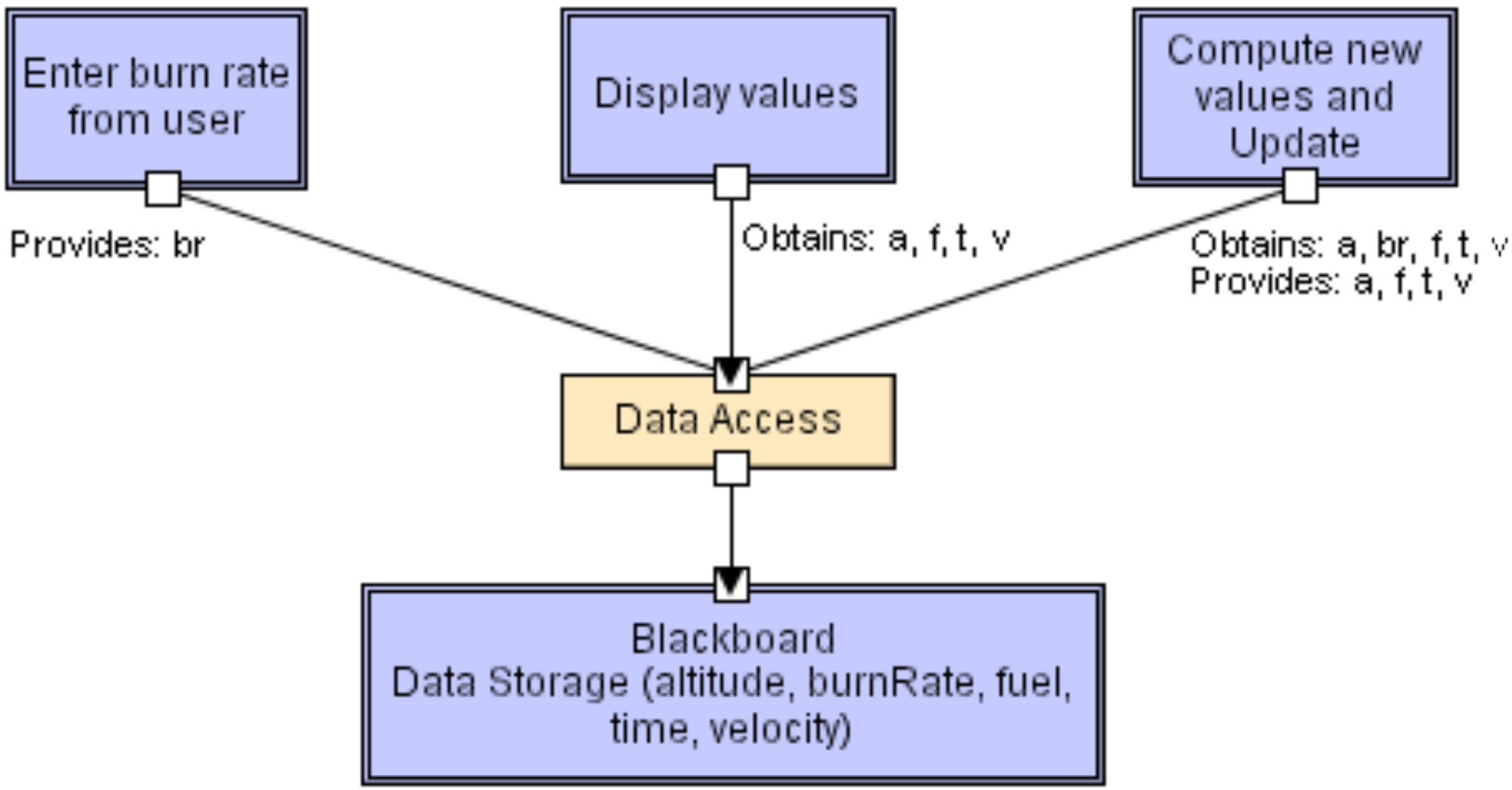

Style: Blackboard

- Independent programs communicate exclusively through shared global data repository.
- Components:
  - Independent programs (knowledge sources), blackboard.
- Connections:
  - Varies: memory reference, procedure call, DB query.
- Data elements:
  - Data stored on blackboard.
- Topology:
  - Star; knowledge sources surround blackboard.

Style: Blackboard

- Variants:
  - Pull: clients check for blackboard updates.
  - Push: blackboard notifies clients of updates.
- Qualities:
  - Efficient sharing of large amounts of data. Strategies to complex problems do not need to be pre-planned.
- Typical uses:
  - Heuristic problem solving.
- Cautions:
  - Not optimal if regulation of data is needed or the data frequently changes and must be updated on all clients.

Implicit invocation

- In contrast to other patterns, the flow of control is "reversed"
- Commonly integrate tools in shared environments
- Components tend to be loosely coupled
- Often used in:
  - UI applications (e.g., MVC)
  - Enterprise systems
    - (e.g., WebSphere)

Examples:

Publish-subscribe

Event-based

Style: Publish-subscribe

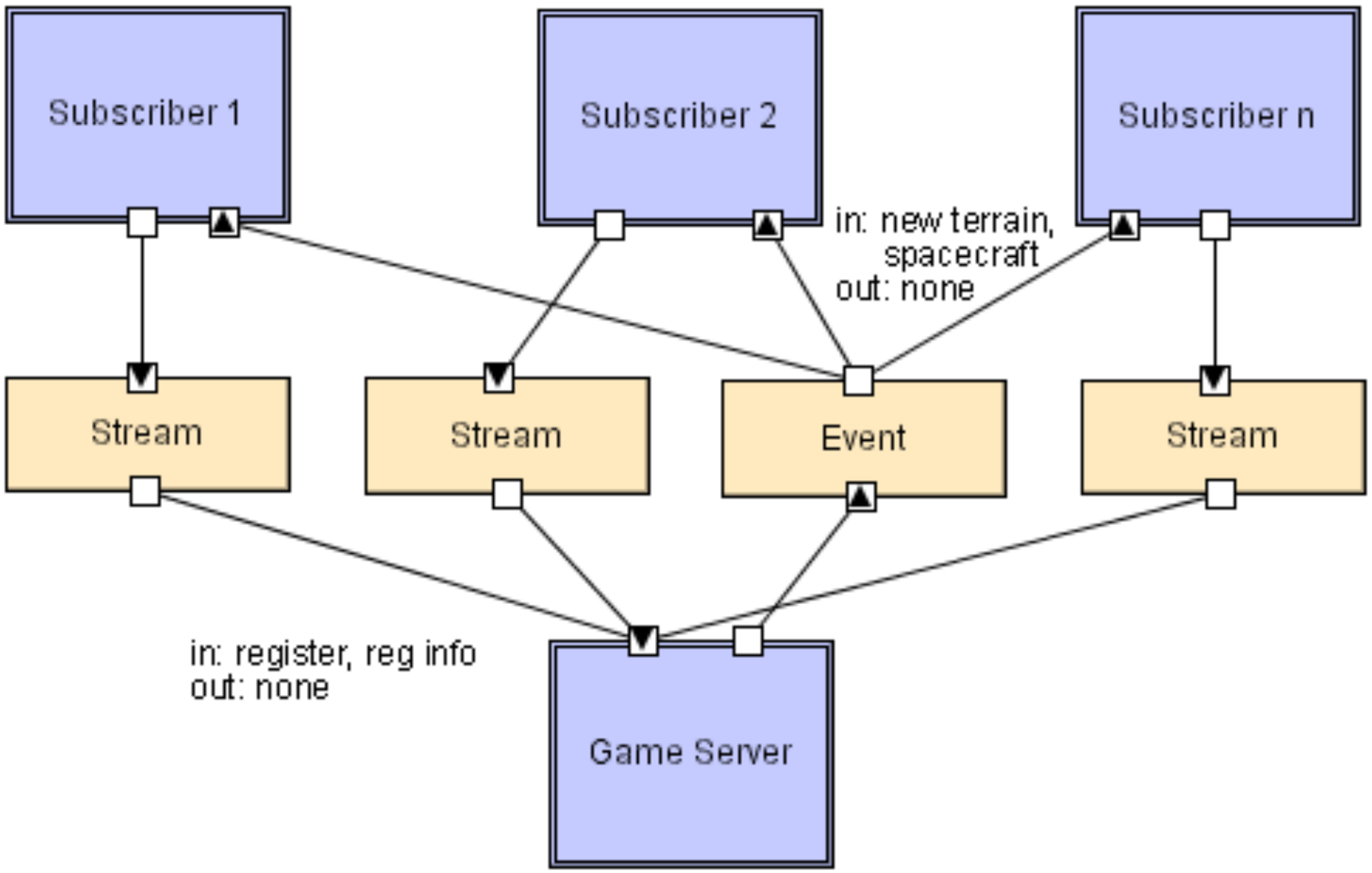

[TAILOR ET AL.]

Style: Publish-subscribe

- Subscribers register for specific messages or content. Publishers maintain registrations and broadcast messages to subscribers as required.
- Components:
  - Publishers, subscribers, proxies.
- Connections:
  - Typically network protocols.
- Data elements:
  - Subscriptions, notifications, content.
- Topology:
  - Subscribers connect to publishers either directly or through intermediaries.

Style: Publish-subscribe

- Variants:
  - Complex matching of subscribers and publishers can be supported via intermediaries.
- Qualities:
  - Highly-efficient one-way notification with low coupling.
- Typical uses:
  - News, GUI programming, network games.
- Cautions:
  - Scalability to large numbers of subscriber may require specialized protocols.

Style: Event-based

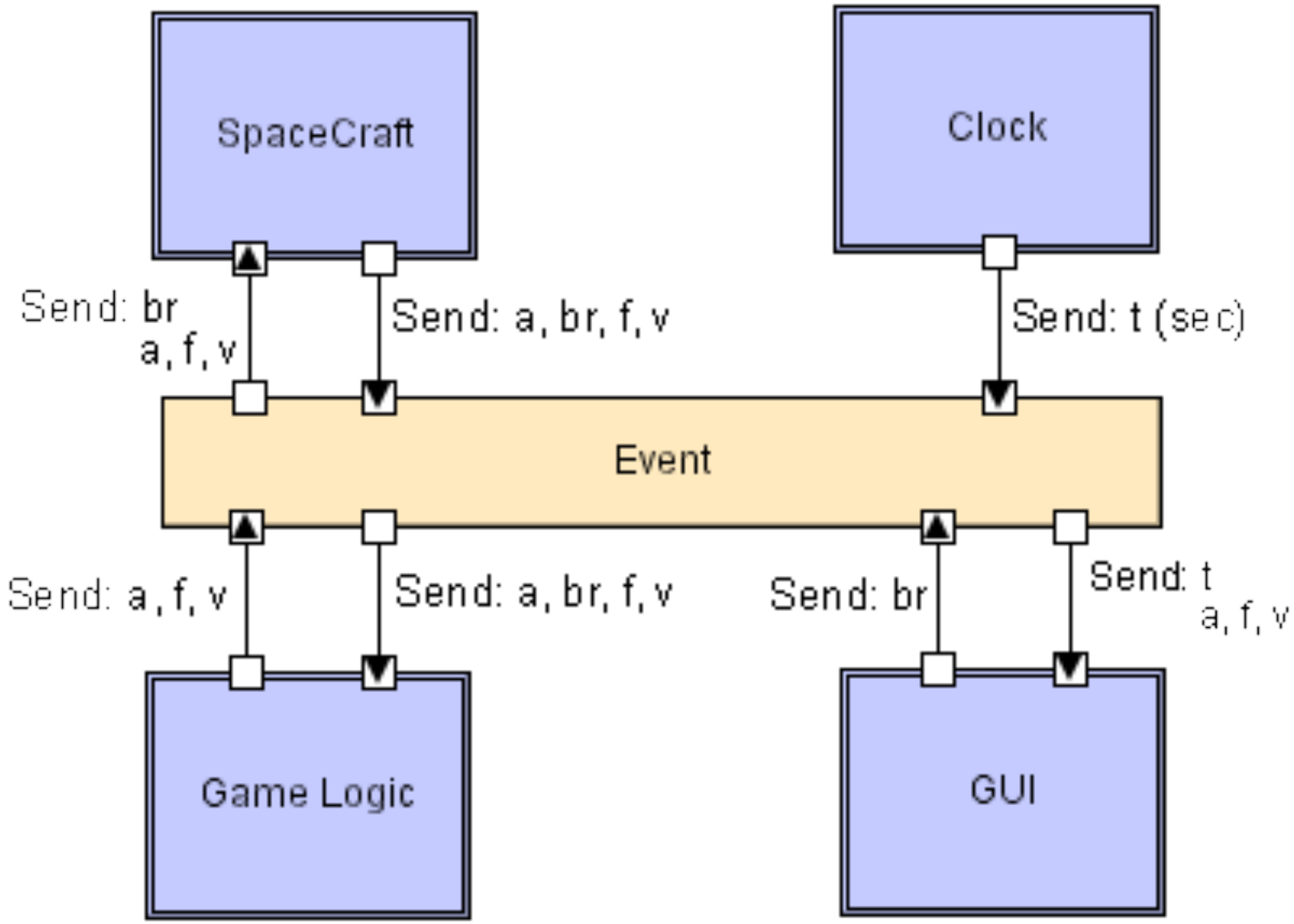

[TAILOR ET AL.]

Style: Event-based

- Independent components asynchronously emit and receive events.
- Components:
  - Event generators / consumers.
- Connections:
  - Event bus.
- Data elements:
  - Events.
- Topology:
  - Components communicate via bus, not directly.

Style: Event-based

- Variants:
  - May be push or pull based (with event bus).
- Qualities:
  - Highly scalable. Easy to evolve. Effective for heterogenous applications.
- Typical uses:
  - User interfaces. Widely distributed applications (e.g., financial markets, sensor networks).
- Cautions:
  - No guarantee event will be processed. Events can overwhelm clients.

Peer to Peer

- Network of loosely-coupled peers
- Peers act as clients and servers
- State and logic are decentralized amongst peers
- Resource discovery a fundamental problem

Peer-to-peer

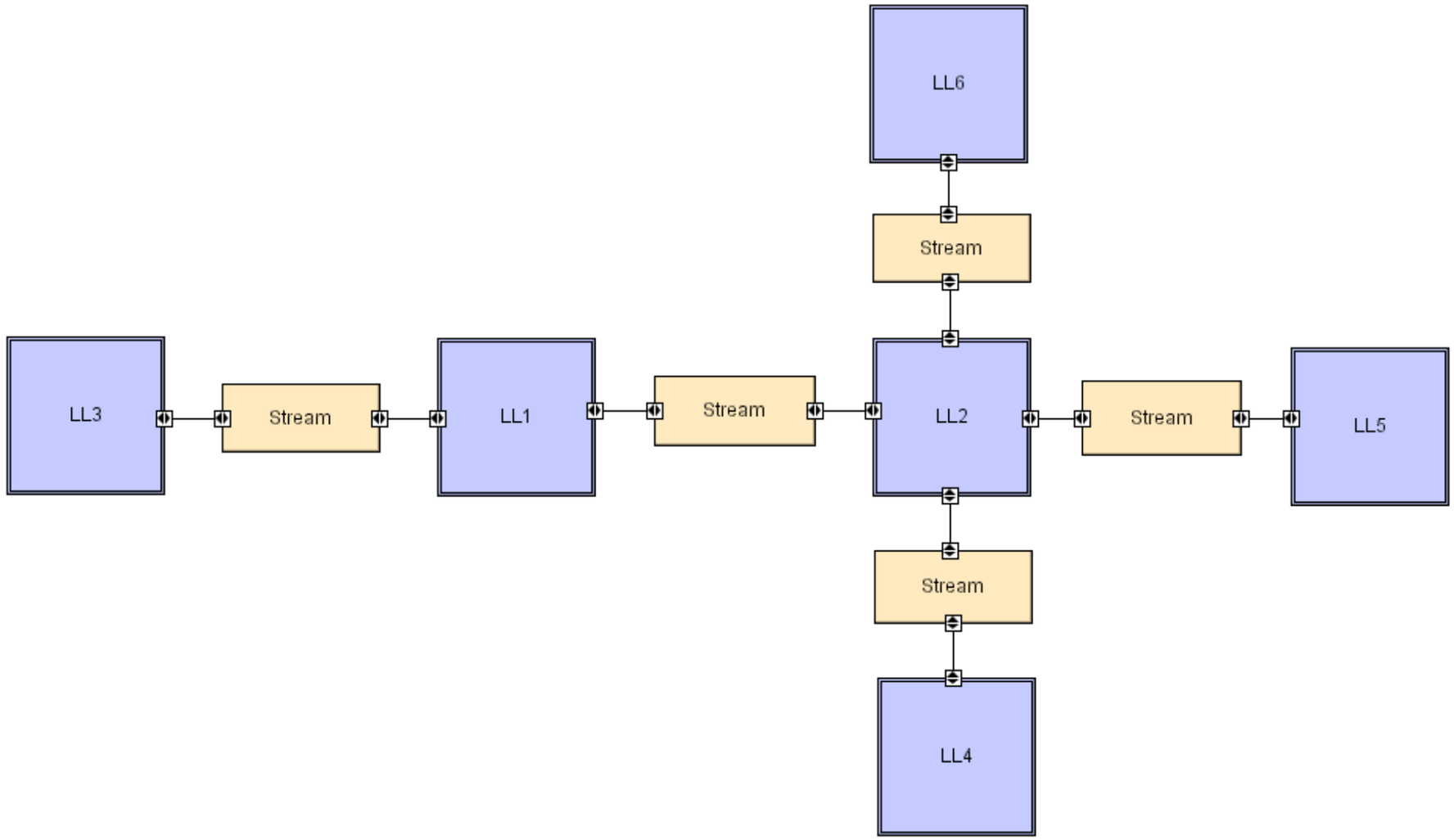
LL6
Stream
LL3
Stream
LL1
Stream
LL2
Stream
LL5
Stream
LL4

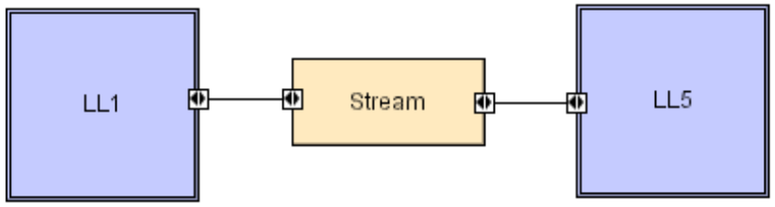
LL1
Stream
LL5

[TAILOR ET AL.]

Style: Peer-to-peer

- State and behaviour are distributed among peers that can act as clients or servers.
- Components:
  - Peers (aka independent components).
- Connections:
  - Network protocols.
- Data elements:
  - Network messages.
- Topology:
  - Network. Can vary arbitrarily and dynamically.

[TAILOR ET AL.]

Style: Peer-to-peer

- Qualities:
  - Decentralized computing. Robust to node failures. Scalable.
- Typical uses:
  - When informations and operations are distributed.
- Cautions:
  - Security. Time criticality.

[TOPOLOGY FROM TAILOR ET AL.]

Activity

- Design Quest using an assigned pattern.
  - What are the components, connectors, and topology?